Rytons A1® Fire-rated 90° Ducting Kit 204mm x 60mm with Return Grille Double Air Brick Flanged
Custom RAL colour air brick in matt, semi-gloss or gloss finish achieving Class A2-s1, d0
Registered Design 6085476
Product Code: A190DK204X60RGDF

RYTONS
www.vents.co.uk
A Family Business
Since 1972

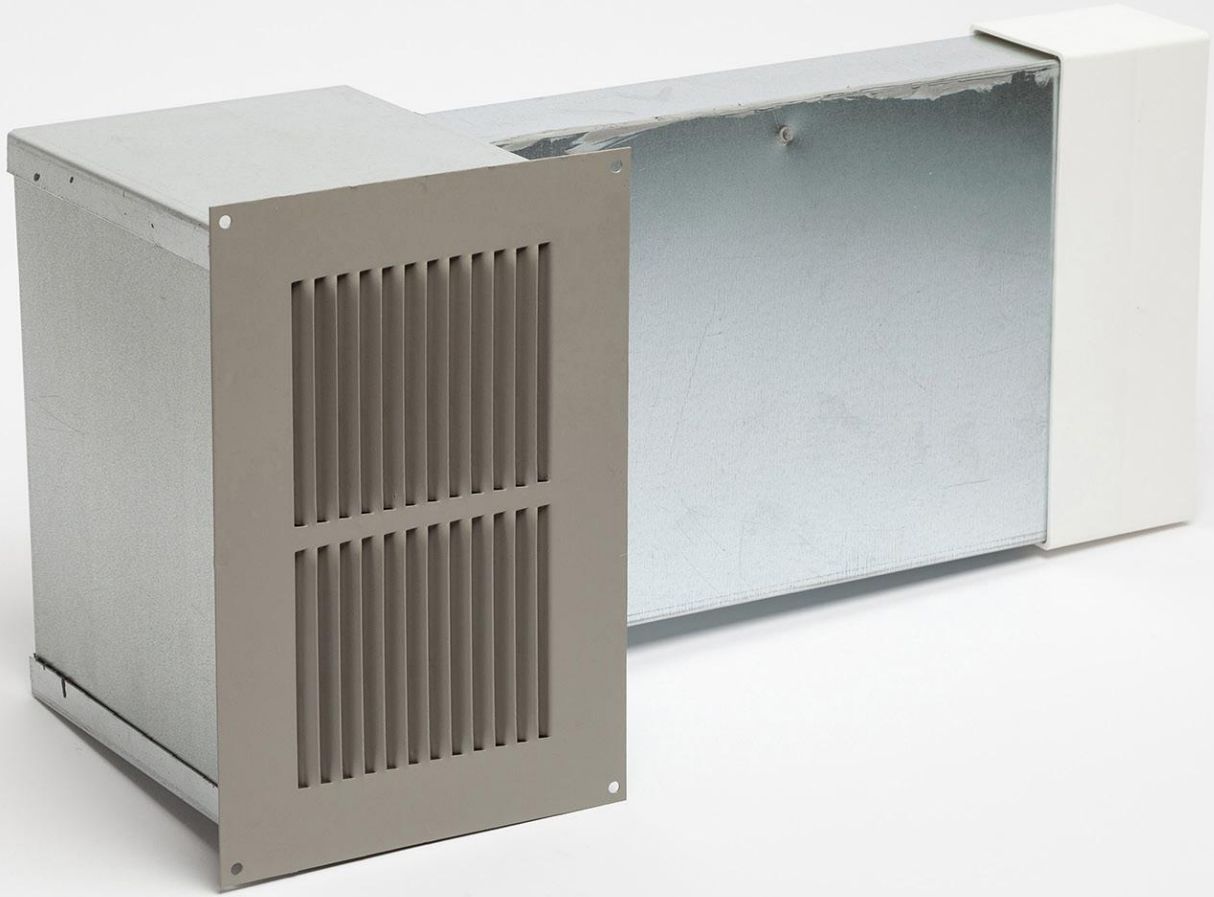

MADE IN BRITAIN®

EUROPEAN CLASSIFICATION A1
NON-COMBUSTIBLE . FIRE SAFE

DO NOT SCALE

Rytons A1® Fire-rated 90° Ducting Kit 204mm x 60mm with Return Grille Double Air Brick Flanged

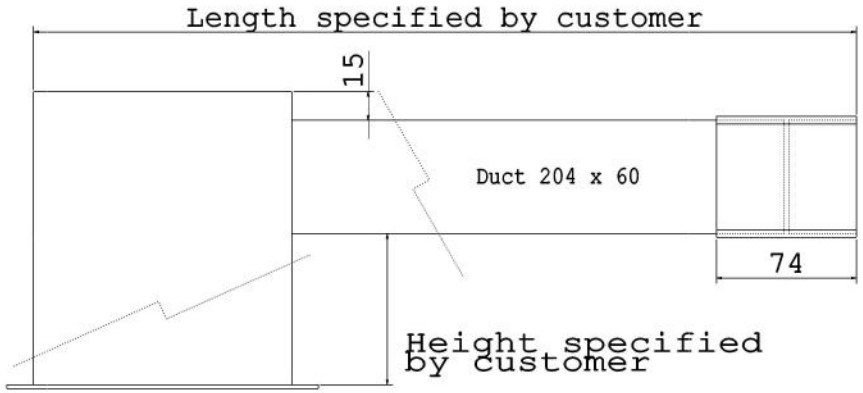

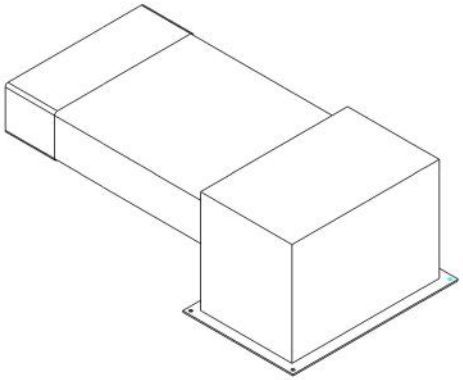

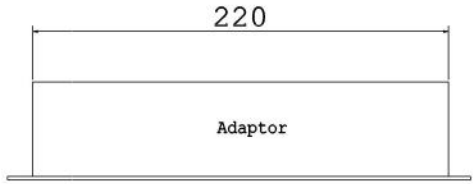

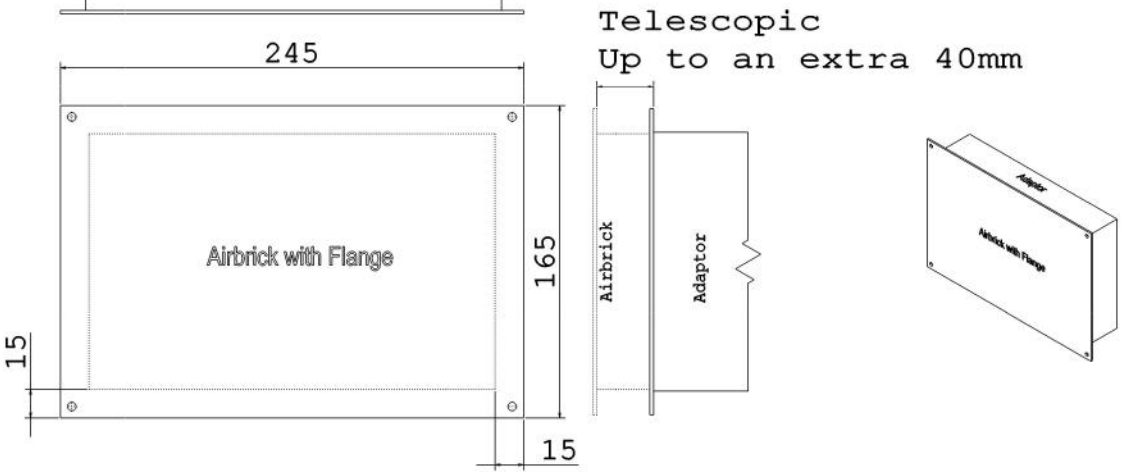

RYTONS www.vents.co.uk A Family Business Since 1972	Rytons A1® Fire-rated 90° Ducting Kit 204mm x 60mm with Return Grille Double Air Brick Flanged	Product Code: A190DK204X60RGDF	Return Grille Double Air Brick Flanged 18,720mm² free area (> 90% of the duct)	Registered Design No.: 6085476	V3	EUROPEAN CLASSIFICATION A1 NON-COMBUSTIBLE . FIRE SAFE
	• Drawings are not to scale • Dimensions are in mm • Products are hand made and have a tolerance of +/- 5%	Intellectual property of Rytons Building Products Ltd. Not to be copied, distributed or reproduced without Rytons written agreement. In case of query email admin@rytons.com.				MADE IN BRITAIN®